MELRON

Project Out Handle

Melron bronze architectural hardware is handcrafted from start to finish in our Central Wisconsin facility. The product you choose is cast in a sand mold, tumbled, machined and finished by our small group of skilled craftspeople. The texture of the sand grains used to make the mold give our hardware its unique characteristics.
Sand cast bronze hardware embodies strength, durability and beauty that is impossible to achieve any other way.

ALLOY AND FINISHES
This product pictured is the White Bronze alloy with the Satin finish.

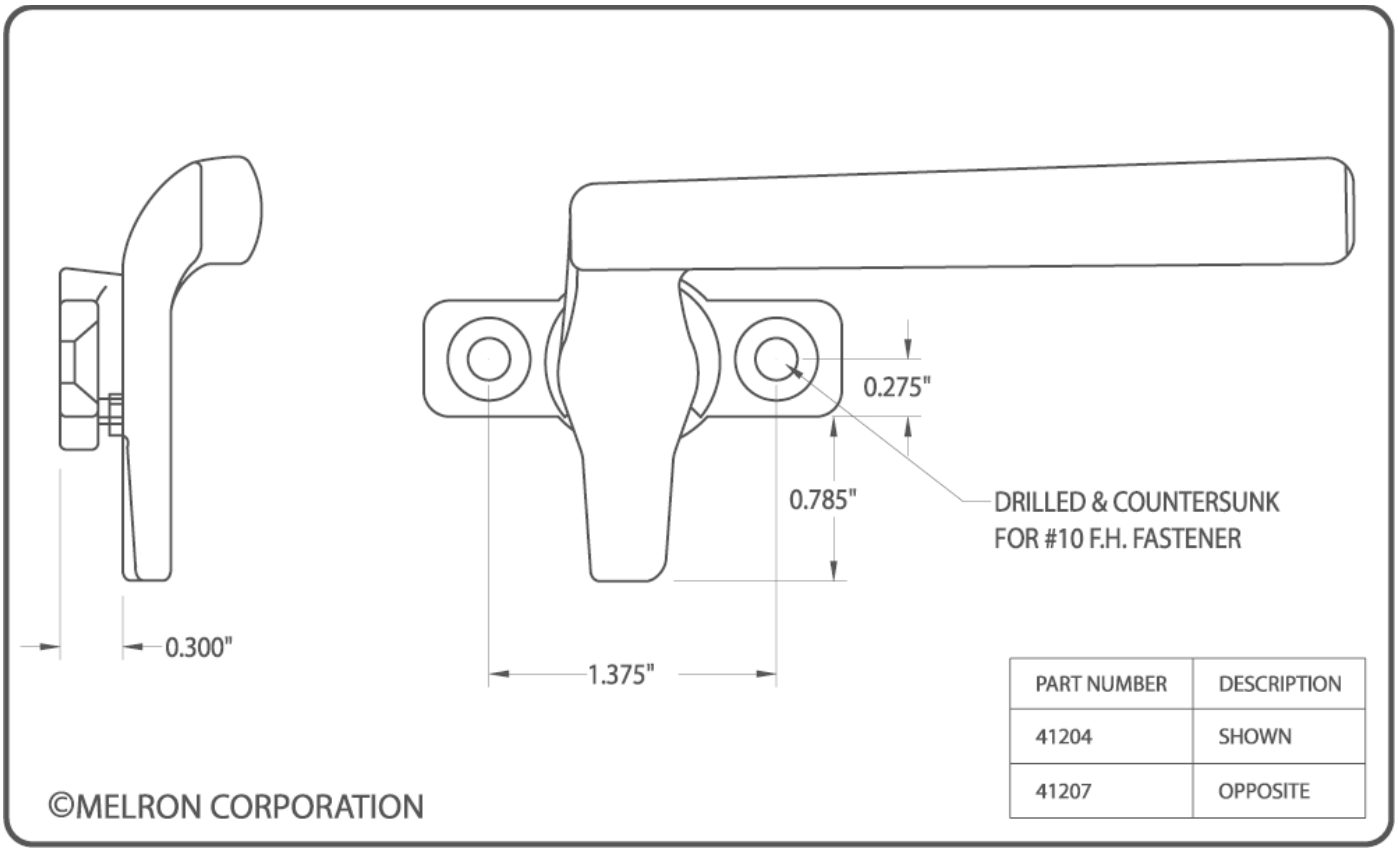

PART NUMBER	DESCRIPTION
41204	SHOWN
41207	OPPOSITE

For information email us at info@melroncorp.com or call 715-359-7001